RSR

WHEELED MINI SKID STEER - OPERATOR & MAINTENANCE MANUAL

Honda GX690 petrol engine | Revision A - October 2026

Read and understand this manual before operating, servicing or transporting the machine. Keep this manual with the machine.

Document control and machine identification

This manual is prepared for the **RYNOQUIP RSR wheeled mini skid steer fitted with a Honda GX690 engine**. It replaces supplier model naming, supplier branding, unrelated machine variants and unclear translated wording in the source document.

Important: the machine data plate, safety decals and component labels fitted to the individual machine take priority if a build-specific detail differs from this manual. Do not assume a feature is fitted unless it is present on the machine.

Record	Details
Machine model	RYNOQUIP RSR
Machine serial number	
Honda engine serial number	
Date of manufacture	
Date of purchase	
Dealer / supplier	RYNOQUIP

About this edition

The supplier manual covers multiple power sources, wheeled and tracked variants, optional cabs and several attachment examples. This edition is restricted to the RYNOQUIP RSR configuration shown in this manual: wheeled running gear, seated operator station and Honda GX690 petrol engine.

Honda engine servicing must follow the Honda GX690 owner documentation in Appendix A. The complete English Honda GX630/GX690 owner manual is included; apply the GX690 information only.

Contents

1. Intended use and safety

2. Machine familiarisation

3. Pre-operation inspection

4. Starting and stopping the Honda GX690

5. Driving and steering

6. Working with the loader and attachments

7. Slopes and special operating conditions

8. Shutdown, cleaning and storage

9. Service and maintenance

10. Emergency response and prohibited practices

11. Support and service records

13. Fuel, lubricants and standard fastener torques

Appendix A - Honda GX690 Owner's Manual

1. Intended use and safety

Intended use

The RYNOQUIP RSR is a compact wheeled skid steer loader intended for material handling and compatible attachment work. Use only attachments that are correctly coupled and suitable for the machine.

Only competent operators familiar with the controls, hazards and emergency shutdown procedure should operate or service the machine.

Core safety rules

• Wear close-fitting work clothing and suitable PPE. Keep loose clothing, jewellery and body parts away from moving components.

• Never carry passengers or lift people in a bucket or attachment.

• Keep bystanders clear of the operating area.

• Keep the attachment or load low while travelling.

• Do not work beneath raised lift arms or attachments unless they are mechanically supported by an approved device.

• Do not operate in enclosed or poorly ventilated areas. Engine exhaust contains carbon monoxide.

• Keep fuel away from flames, sparks and hot surfaces. Stop and cool the engine before refuelling.

• Do not remove or modify guards, safety devices, interlocks or hydraulic components without an approved repair procedure.

Do not operate the machine if steering, braking, hydraulic controls, attachment retention or any safety device is defective.

Slope limit

Do not operate the Honda GX690 on slopes greater than 20 degrees (36%). Machine stability, ground conditions and attachment/load position may require a much lower limit. Avoid side-slope travel wherever possible.

2. Machine familiarisation

The RSR consists of the wheeled undercarriage, frame, loader arms, attachment quick-coupler, hydraulic system, Honda GX690 engine, operator seat and controls, electrical system and protective operator structure.

Operator station

Before operating, identify the ignition/engine controls, throttle, travel/steering controls, lift and tilt controls, auxiliary hydraulic control, parking function and any emergency-stop or interlock devices fitted to the machine.

Control layouts can vary by production build. Confirm each control function at low engine speed in an open area before commencing work.

Quick-coupler and auxiliary hydraulics

The front quick-coupler allows compatible buckets and attachments to be fitted. Where hydraulic attachments are used, ensure couplers are clean, fully connected and routed so hoses cannot be pinched, stretched or contacted by tyres or moving loader arms.

3. Pre-operation inspection

Area	Check before use
Tyres / wheels	Tyre condition and pressure where applicable; wheel nuts; cuts, damage or loose components.
Loader arms / frame	Cracks, deformation, loose pins or bolts, damaged welds, guards and protective structure.
Quick-coupler	Locking pins move freely and fully engage the attachment.
Hydraulics	Oil level; hoses, fittings, cylinders and couplers for leaks, damage or abrasion.
Honda GX690	Engine oil level, fuel level, air cleaner condition and visible leaks.
Controls / safety	Travel, lift, tilt and auxiliary controls return correctly; parking function and interlocks operate as fitted.
Work area	Bystanders, overhead or underground services, edges, slopes, obstacles and soft ground.

Correct any defect that can affect safe operation before using the machine. Do not bypass a safety device or continue operating with a known hydraulic, steering or attachment-locking fault.

4. Starting and stopping the Honda GX690

Starting

• Ensure all hydraulic controls are in neutral and the attachment is lowered or safely positioned.

• Set the parking function or brake as fitted.

• For a cold engine, use the choke as described in the Honda manual.

• Move the throttle away from minimum, turn the engine switch to ON, then operate the starter.

• Release the starter as soon as the engine starts. Do not crank continuously for more than 5 seconds; wait at least 10 seconds before another attempt.

• Warm the engine for 2-3 minutes before applying load.

Stopping

• Lower the attachment to the ground and return all hydraulic controls to neutral.

• Set the parking function or brake.

• Reduce engine speed to minimum.

• Turn the engine switch OFF and remove the key.

For engine-specific operation, maintenance and troubleshooting, follow Appendix A - Honda GX690 Owner’s Manual.

5. Driving and steering

Straight travel

Operate the left and right travel controls smoothly and together to move straight forward or reverse. Avoid sudden control inputs, particularly at high engine speed or when carrying a load.

Turning

Skid-steer turning is achieved by changing the relative speed or direction of the left and right wheels. For tighter turns, one side may move slower or in the opposite direction to the other.

Avoid abrupt or high-speed turns. Skid steering on high-grip surfaces increases tyre wear and driveline load, can mark the surface and can reduce machine stability.

Reverse travel

Before reversing, check behind and to both sides. Travel slowly where visibility is restricted. Do not rely solely on mirrors or cameras if fitted.

Hydraulic oil temperature

Maximum hydraulic oil temperature: 85 C

If hydraulic oil temperature reaches 85 C, stop working the machine and allow the hydraulic system to cool.
Before returning to operation:
- Check that the hydraulic oil cooler fan is operating.
- Inspect the hydraulic oil cooler for dirt, debris or airflow blockage and clean as required.

Do not continue operating at or above 85 C. If overheating continues, stop using the machine until the cause is identified and repaired.

6. Working with the loader and attachments

Loader operation

• Raise and lower the loader arms smoothly.

• Tilt/curl the bucket or attachment progressively; avoid sudden movements with a raised load.

• Approach material at low speed with the bucket or attachment close to the ground.

• When carrying a load, keep it low - typically only high enough to clear the ground and obstacles.

• Do not exceed the rated capacity of the machine or attachment.

Changing attachments

• Park on firm, level ground and lower the attachment.

• Stop the engine, apply the parking function and release residual hydraulic pressure.

• Unlock the quick-coupler and disconnect hydraulic hoses if fitted.

• Approach the replacement attachment squarely and fully engage the mounting interface.

• Lock the coupler pins and visually confirm full engagement before lifting or travelling.

• Reconnect hydraulic hoses only after cleaning the couplers and confirming correct routing.

Pressurised hydraulic oil can penetrate skin and cause serious injury. Never search for leaks with your hand. Seek immediate medical treatment for a suspected injection injury.

7. Slopes and special operating conditions

Slopes

• Avoid side-slope travel. Travel straight up or down only where conditions are suitable.

• Keep the heavier end of the machine uphill where practicable and keep the load low.

• Do not turn, accelerate sharply, brake abruptly or park on a slope.

• Use a lower travel speed on rough, wet, loose or slippery ground.

Soft, muddy or uneven ground

Reduce speed and avoid deep ruts, unsupported edges and ground that can collapse under the machine. Avoid repeated aggressive steering inputs that can dig tyres into soft ground.

Confined areas

Plan the travel path before entering a confined area. Maintain clearance for the loader arms, attachment and rear of the machine through the full steering and lift range.

8. Shutdown, cleaning and storage

Safe shutdown

- Park on firm, level ground away from traffic and hazards.
- Lower the loader arms and attachment fully to the ground.
- Return all controls to neutral and set the parking function.
- Run the engine briefly at low speed after heavy work if required for temperature stabilisation, then switch off.
- Remove the key before leaving the machine.

Daily cleaning

Remove mud, grass and debris from the tyres, frame, loader arms, hydraulic cooler and engine cooling-air areas. Do not direct high-pressure water into electrical connectors, switches, bearings, the air cleaner or muffler openings.

Storage

Store under cover where practical. For extended storage, follow the Honda GX690 fuel and engine-storage procedure in Appendix A.

Service and maintenance schedule

Use the interval that occurs first where both hours and time are shown. Shorten intervals in severe dust, heat, mud, frequent hydraulic-attachment use or other high-duty-cycle conditions. Honda GX690 requirements are from the Honda owner's manual; machine intervals are RYNOQUIP service requirements.

Interval	Machine service	Honda GX690
Daily / before use	Grease all machine grease points. Check hydraulic oil level and inspect for leaks. Inspect hoses/couplers, pins and bushes, attachment locking pins, controls/safety devices and hydraulic-cooler cleanliness. Inspect tyres for damage or pressure loss; check wheel nuts and wheel-motor areas for looseness, leakage or abnormal condition.	Check engine oil level and air cleaner.
First 10 h	Re-check accessible chassis, loader-arm, wheel and wheel-motor mounting fasteners after initial bedding-in. Tighten to the specified torque where a torque value is provided.	-
First month / 20 h	-	Change engine oil.
First 50 h	Replace hydraulic oil and hydraulic filter. Inspect hydraulic tank breather and suction strainer if fitted. Inspect all fasteners, pins, bushes, hoses, fittings, cooler and battery connections.	-
Every 50 h	Inspect loader-arm and coupler pins/bushes, hydraulic cylinders, hoses/fittings, cooler, battery/terminals, structural welds and all safety devices. Check tyre condition/pressure, wheel nuts and wheel-motor mountings/hoses for leakage, looseness or abnormal condition.	-
Every 6 months / 100 h	-	Change engine oil; clean air cleaner; check/adjust spark plugs; clean spark arrester if fitted.
Every 200 h	Replace hydraulic oil and hydraulic filter. Inspect/clean hydraulic tank breather and suction strainer if fitted. Inspect auxiliary couplers and all hydraulic hoses closely.	Replace engine oil filter.
Every year / 300 h	-	Replace spark plugs; check/adjust idle speed and valve clearance (dealer/service technician).
Every 12 months	Full structural inspection: frame, loader arms, welds, quick-coupler, pins/bushes, guards, controls, wiring and safety devices. Repair excessive wear before return to service.	-
Every 2 years / 500 h	-	Replace paper air-filter element; replace fuel filter (dealer/service technician).
Every 1000 h	-	Clean combustion chamber (dealer/service technician).
Every 2 years	-	Check fuel tube and replace if necessary.
Every 5 years	Replace hydraulic hoses regardless of external appearance. Replace immediately at any time if leaking, cracked, abraded, blistered, kinked or otherwise damaged.	-
Condition based	Replace tyres when damaged or excessively worn, including deep cuts/cracking, exposed carcass or cords, severe lug loss, bulging, repeated pressure loss or other structural damage.	-

Important: Hydraulic oil and filter: first 50 hours, then every 200 hours. General greasing: daily. Do not wait for a scheduled interval to correct a safety defect, leak, loose fastener, worn pin/bush, damaged tyre or hose.

Hydraulic oil temperature: Maximum 85 C. If 85 C is reached, stop work and allow the system to cool. Check hydraulic-oil-cooler fan operation and inspect the cooler for dirt, debris or airflow blockage. Do not resume operation at or above 85 C; if overheating continues, stop using the machine until the cause is identified and repaired.

Honda notes: Service the air cleaner more frequently in dusty conditions. Honda specifies the engine oil filter every 200 hours, combustion-chamber cleaning every 1000 hours, and fuel-tube inspection every 2 years. Dealer-level items should be performed by a competent service technician.

10. Emergency response and prohibited practices

If the machine behaves abnormally

Stop work, lower the attachment, move to a safe location if possible, stop the engine and inspect the machine. Do not continue operating with abnormal noise, uncontrolled movement, hydraulic leakage, steering problems or damaged attachment retention.

If the machine overturns

Remain within the operator station/protective structure if possible and keep your body inside the machine envelope. Do not jump from a moving or overturning machine.

Prohibited practices

- No passengers.
- Do not lift or carry people in the bucket or on attachments.
- Do not work with guards or safety devices removed.
- Do not extend body parts outside the operator area while the machine is moving.
- Do not perform unauthorised modifications to the hydraulic, electrical, steering or protective systems.
- Do not operate when impaired by alcohol, drugs, fatigue or medication that makes operation unsafe.

11. Support and service records

When requesting parts or technical support, provide the model **RYNOQUIP RSR**, machine serial number, Honda engine serial number, operating hours and a clear description of the issue. Photos or video can assist diagnosis.

Service record

Date / hours	Work completed	Parts / fluids	Technician

Supplier source identification: original manual supplied as H-495 Small Skid Loader Instruction Manual. This RYNOQUIP edition supersedes that model naming for the RSR configuration.

Fuel, lubricants and standard fastener torques

Fuel and lubricant specifications

Item	Specification	Requirements / notes
Fuel	Unleaded petrol	Minimum 91 RON. Maximum E10 ethanol. Use fresh, clean fuel only.
Engine oil	SAE 10W-30 full synthetic	API service category SJ or later (or equivalent).
Hydraulic oil	ISO VG 46 hydraulic oil	Anti-wear hydraulic oil (AW46) suitable for mobile hydraulic systems.
Grease	Extreme-pressure grease	EP2 / NLGI No. 2 multi-purpose extreme-pressure grease.

Honda GX690 engine oil capacity: 1.5 L without oil-filter replacement; 1.7 L with oil-filter replacement.

Standard metric fastener torque

Use this chart only where no component-specific torque is stated. Values are for clean, dry, unlubricated metric coarse-thread fasteners.

Bolt size	Class 8.8 (N.m)	Class 10.9 (N.m)
M5	6	9
M6	10	15
M8	25	36
M10	49	72
M12	85	125
M14	135	200
M16	210	310
M18	290	430
M20	410	610

IMPORTANT

Component-specific torque always overrides this chart. Do not use these values for hydraulic fittings, hose ends, banjo bolts, engine fasteners, wheel nuts/studs, pivot pins, track-tension hardware or fasteners into aluminium unless specifically instructed. Lubricated or plated fasteners may require a lower torque. Replace damaged or stretched fasteners with the same strength grade as the original.

General torque values only. RYNOQUIP, Honda or component-specific specifications always override this table.

Appendix A - Honda GX690 Owner’s Manual

The RSR is fitted with a **Honda GX690**. Honda publication **37ZCN604 / 00X37-ZCN-6040** covers the GX630 and GX690. The complete English section of the official manual follows this page. For the RSR, apply the GX690 information only.

Official Honda GX690 Owner’s Manual
Scan the QR code or use the clickable link below:
Honda GX630/GX690 Owner’s Manual (official PDF)

The Honda manual is the controlling reference for engine oil, fuel, air cleaner, spark plugs, engine-specific maintenance, storage and engine troubleshooting.

INTRODUCTION

Thank you for purchasing a Honda engine! We want to help you to get the best results from your new engine and to operate it safely. This manual contains information on how to do that; please read it carefully before operating the engine. If a problem should arise, or if you have any questions about your engine, consult an authorized Honda servicing dealer.

All information in this publication is based on the latest product information available at the time of printing. Honda Motor Co., Ltd. reserves the right to make changes at any time without notice and without incurring any obligation. No part of this publication may be reproduced without written permission.

This manual should be considered a permanent part of the engine and should remain with the engine if resold.

Review the instructions provided with the equipment powered by this engine for any additional information regarding engine startup, shutdown, operation, adjustments or any special maintenance instructions.

United States, Puerto Rico, and U.S. Virgin Islands:
We suggest you read the warranty policy to fully understand its coverage and your responsibilities of ownership. The warranty policy is a separate document that should have been given to you by your dealer.

SAFETY MESSAGES

Your safety and the safety of others are very important. We have provided important safety messages in this manual and on the engine. Please read these messages carefully.

A safety message alerts you to potential hazards that could hurt you or others. Each safety message is preceded by a safety alert symbol ⚠ and one of three words, DANGER, WARNING, or CAUTION.

These signal words mean:

⚠ DANGER You WILL be KILLED or SERIOUSLY HURT if you don't follow instructions.

⚠ WARNING You CAN be KILLED or SERIOUSLY HURT if you don't follow instructions.

⚠ CAUTION You CAN be HURT if you don't follow instructions.

Each message tells you what the hazard is, what can happen, and what you can do to avoid or reduce injury.

DAMAGE PREVENTION MESSAGES

You will also see other important messages that are preceded by the word NOTICE.

This word means:

NOTICE Your engine, other property, or the environment can be damaged if you don't follow instructions.

This entire book is filled with important safety information –please read it carefully.

©2021 Honda Motor Co., Ltd. –All Rights Reserved

GX630R · GX690R

37ZCN604
00X37-ZCN-6040

HONDA

OWNER'S MANUAL
MANUEL DE L'UTILISATEUR
MANUAL DEL PROPIETARIO

GX630 • GX690

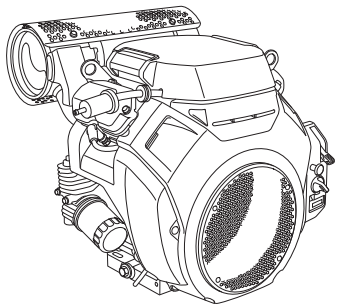

⚠ WARNING: ⚠

The engine exhaust from this product contains chemicals known to the State of California to cause cancer, birth defects or other reproductive harm.

ENGLISH

FRANÇAIS

ESPAÑOL

CONTENTS

INTRODUCTION....1
SAFETY MESSAGES....1
SAFETY INFORMATION....2
SAFETY LABEL LOCATION....2
COMPONENT & CONTROL LOCATION....3
FEATURES....3
BEFORE OPERATION CHECKS....4
OPERATION....4
SAFE OPERATING PRECAUTIONS....4
STARTING THE ENGINE....4
STOPPING THE ENGINE....5
SETTING ENGINE SPEED....6
SERVICING YOUR ENGINE....6
THE IMPORTANCE OF MAINTENANCE....6
MAINTENANCE SAFETY....6
SAFETY PRECAUTIONS....7
MAINTENANCE SCHEDULE....7
REFUELING....7
ENGINE OIL....8
Recommended Oil....8
Oil Level Check....8
Oil Change....8
OIL FILTER....9
AIR CLEANER....9
Inspection....9
Cleaning....9
SPARK PLUG....10
SPARK ARRESTER....11
HELPFUL TIPS & SUGGESTIONS....11
STORING YOUR ENGINE....11
TRANSPORTING....12
TAKING CARE OF UNEXPECTED PROBLEMS....13
FUSE REPLACEMENT....13
TECHNICAL INFORMATION....14
Serial Number Location....14
Battery Connections for Electric Starter....14
Remote Control Linkage....15
Carburetor Modifications for High Altitude Operation....15
EMISSION CONTROL SYSTEM INFORMATION....16
Source of Emissions....16
The U.S. and California Clean Air Acts, and Environment and Climate Change Canada (ECCC)....16
Tampering and Altering....16
Problems That May Affect Emissions....16
Replacement Parts....16
Maintenance....16
Air Index....16
EMISSION CONTROL SYSTEM WARRANTY....17
Warranty Coverage....17
Specifications....17
Tuneup Specifications....17
Quick Reference Information....17
Wiring Diagrams....18
CONSUMER INFORMATION....20
WARRANTY AND DISTRIBUTOR/DEALER LOCATOR INFORMATION....20
CUSTOMER SERVICE INFORMATION....20

SAFETY INFORMATION

- Understand the operation of all controls and learn how to stop the engine quickly in case of emergency. Make sure the operator receives adequate instruction before operating the equipment.
- Do not allow children to operate the engine. Keep children and pets away from the area of operation.
- Your engine's exhaust contains poisonous carbon monoxide. Do not run the engine without adequate ventilation, and never run the engine indoors.
- The engine and exhaust become very hot during operation. Keep the engine at least 1 meter (3 feet) away from buildings and other equipment during operation. Keep flammable materials away, and do not place anything on the engine while it is running.

SAFETY LABEL LOCATION

This label warns you of potential hazards that can cause serious injury. Read it carefully.
If the label comes off or becomes hard to read, contact your servicing dealer for replacement.

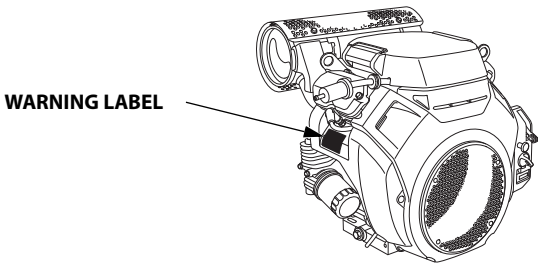

WARNING LABEL	For EU	Except EU
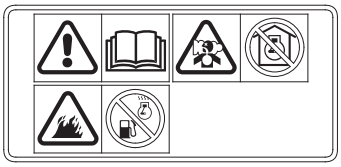	attached to product	supplied with product
⚠ WARNING Gasoline is highly flammable and explosive. Turn engine off and let cool before refueling. The engine emits toxic carbon monoxide. Do not run in an enclosed area. Read Owner's Manual before operation.	supplied with product	attached to product
⚠ ATTENTION L'essence est très inflammable et explosive. Arrêter le moteur et le laisser refroidir avant de faire le plein d'essence. Le moteur produit les vapeurs nocives de monoxyde de carbone. Ne pas utiliser dans un local enclos. Lire le manuel de propriétaire avant l'utilisation.	supplied with product	supplied with product

Honda factory equipped muffler.

MUFFLER CAUTION LABEL	
	not included
⚠ CAUTION HOT MUFFLER CAN BURN YOU. Stay away if engine has been running.	supplied with product
⚠ ATTENTION L'ECHAPPEMENT CHAUD PEUT VOUS BRULER. S'ELOIGNER QUAND LE MOTEUR FONCTIONNE.	supplied with product

Gasoline is highly flammable and explosive. Stop the engine and let cool before refueling.

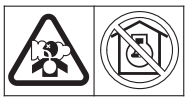

The engine emits toxic poisonous carbon monoxide gas. Do not run in an enclosed area.

Read Owner's Manual before operation.

Hot muffler can burn you.
Stay away if engine has been running.

COMPONENT & CONTROL LOCATION

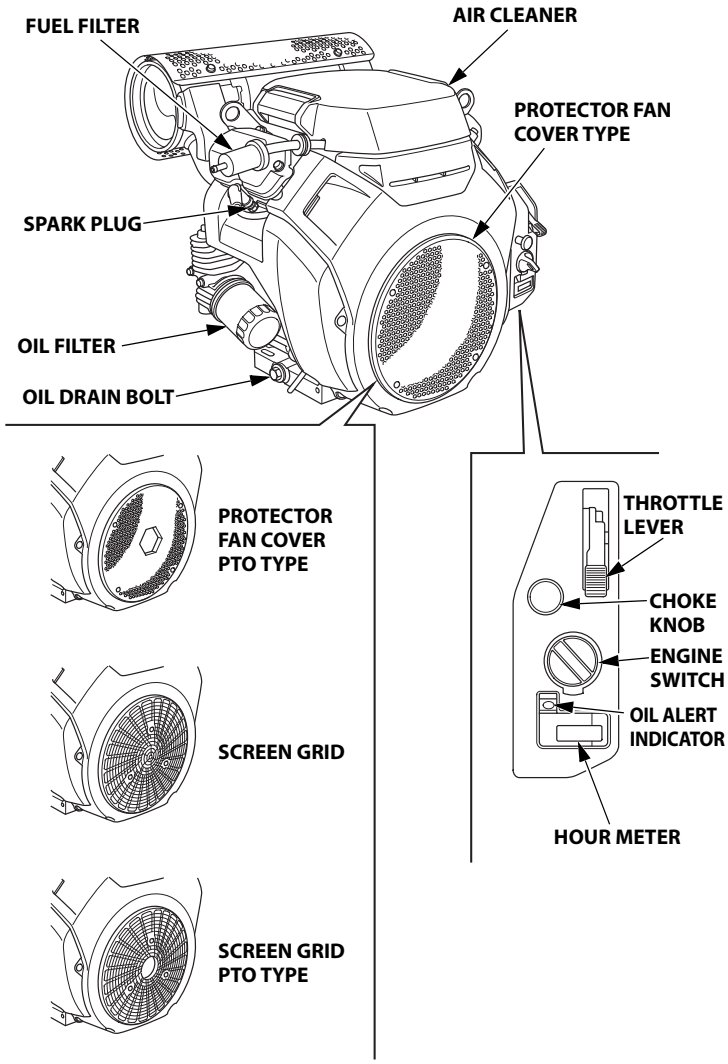

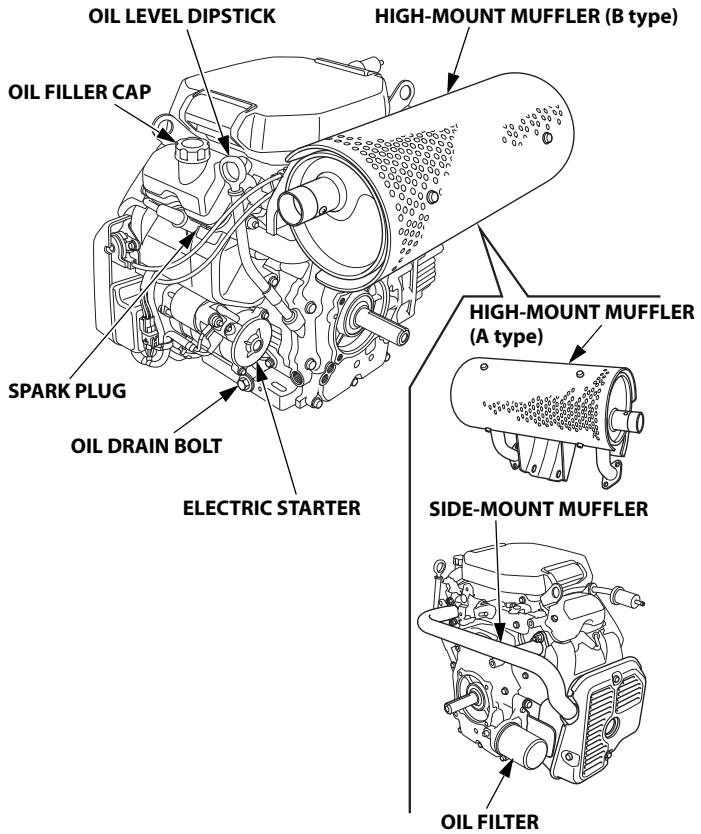

FEATURES

Oil Alert® System (applicable types)
"Oil Alert is a registered trademark in the United States"

The Oil Alert system is designed to prevent engine damage caused by an insufficient amount of oil in the crankcase. Before the oil level in the crankcase can fall below a safe limit, the Oil Alert indicator (red) comes on and the Oil Alert system will automatically stop the engine (the engine switch will remain in the ON position).

If the engine stops and will not restart, check the engine oil level (see page 8) before troubleshooting in other areas.

Hour Meter
After starting the engine, the elapsed time of the engine in use will be count. It will not count the elapsed time of the engine operation by just turning the engine switch ON.

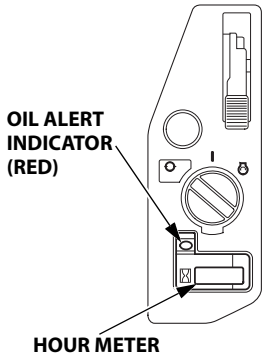

Fuel-cut Solenoid

The engine is equipped with a fuel-cut solenoid that allows fuel to flow to the carburetor main jet when the engine switch is in the ON or START position and stops the flow of fuel to the main jet when the engine switch is in the OFF position.

The engine must be connected to the battery to energize the fuel-cut solenoid, allowing the engine to run. If the battery is disconnected, fuel flow to the carburetor will stop.

BEFORE OPERATION CHECKS

IS YOUR ENGINE READY TO GO?

For your safety, to ensure compliance with environmental regulations, and to maximize the service life of your equipment, it is very important to take a few moments before you operate the engine to check its condition. Be sure to take care of any problem you find, or have your servicing dealer correct it, before you operate the engine.

⚠ WARNING

Failure to properly maintain this engine, or failing to correct a problem before operation, could result in a significant malfunction.

Some malfunctions can cause serious injuries or death.

Always perform a pre-operation inspection before each operation and correct any problems.

Before beginning your pre-operation checks, be sure the engine is level and the engine switch is in the OFF position.

Always check the following items before you start the engine:

Check the General Condition of the Engine

1. Before each use, look around and underneath the engine for signs of oil or gasoline leaks.
2. Remove any excessive dirt or debris, especially around the muffler.
3. Look for signs of damage.
4. Check that all shields and covers are in place, and all nuts, bolts, and screws are tightened.

Check the Engine

1. Check the fuel level. Starting with a full tank will help to eliminate or reduce operating interruptions for refueling.
2. Check the engine oil level (see page 8). Running the engine with a low oil level can cause engine damage.

   The Oil Alert system (applicable types) will automatically stop the engine before the oil level falls below safe limits. However, to avoid the inconvenience of an unexpected shutdown, always check the engine oil level before startup.
3. Check the air filter element (see page 9). A dirty air filter element will restrict air flow to the carburetor, reducing engine performance.
4. Check the equipment powered by this engine.

   Review the instructions provided with the equipment powered by this engine for any precautions and procedures that should be followed before engine startup.

OPERATION

SAFE OPERATING PRECAUTIONS

Before operating the engine for the first time, please review the *SAFETY INFORMATION* section on page 2 and the *BEFORE OPERATION CHECKS* on page 4.

Carbon Monoxide Hazards

For your safety, do not operate the engine in an enclosed area such as a garage. Your engine's exhaust contains poisonous carbon monoxide gas that can collect rapidly in an enclosed area and cause illness or death.

⚠ WARNING

Exhaust contains poisonous carbon monoxide gas that can build up to dangerous levels in closed areas.

Breathing carbon monoxide can cause unconsciousness or death.

Never run the engine in a closed, or even partly closed area.

Review the instructions provided with the equipment powered by this engine for any safety precautions that should be observed with engine startup, shutdown, or operation.

Do not operate the engine on slopes greater than 20° (36%).

STARTING THE ENGINE

1. If the fuel tank is equipped with a valve, be sure the fuel valve is in the OPEN or ON position before attempting to start the engine.
2. To start a cold engine, pull the choke knob out to the CLOSED position.

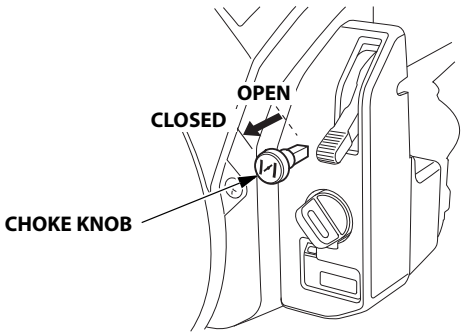

To restart a warm engine, leave the choke knob in the OPEN position.

Some engine applications use a remote-mounted choke control rather than the engine-mounted choke knob shown here. Refer to the instructions provided by the equipment manufacturer.

3. Move the throttle lever away from the MIN. position, about 1/3 of the way toward the MAX. position.

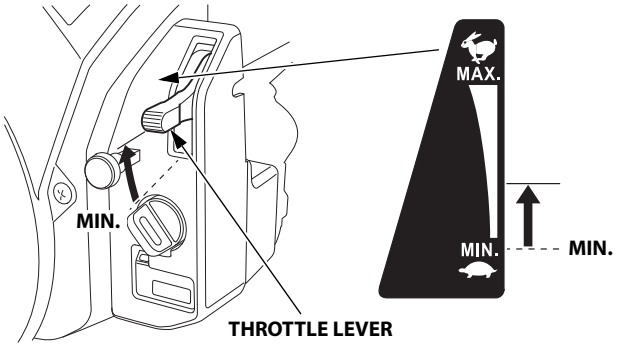

Some engine applications use a remote-mounted throttle control rather than the engine-mounted throttle lever shown here. Refer to the instructions provided by the equipment manufacturer.

4. Turn the engine switch to the ON position.

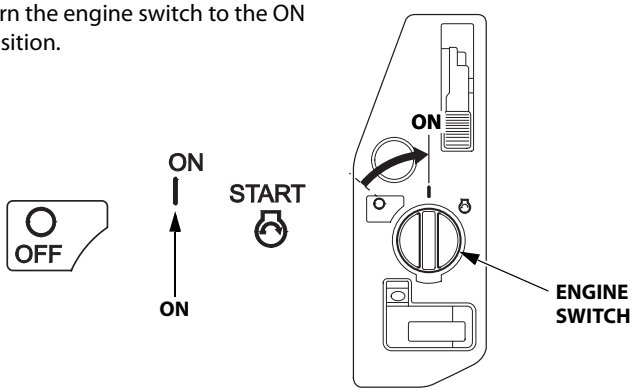

5. Operate the starter.

   Turn the engine switch to the START position, and hold it there until the engine starts.

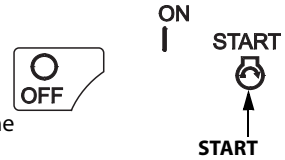

   If the engine fails to start within 5 seconds, release the engine switch, and wait at least 10 seconds before operating the starter again.

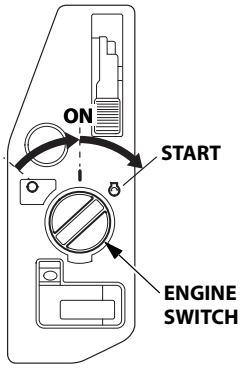

NOTICE

Using the electric starter for more than 5 seconds at a time will overheat the starter motor and can damage it.

   When the engine starts, release the engine switch, allowing it to return to the ON position.

6. Warm up the engine for 2 or 3 minutes.

7. If the choke knob was pulled to the CLOSED position to start the engine, gradually push it to the OPEN position as the engine warms up.

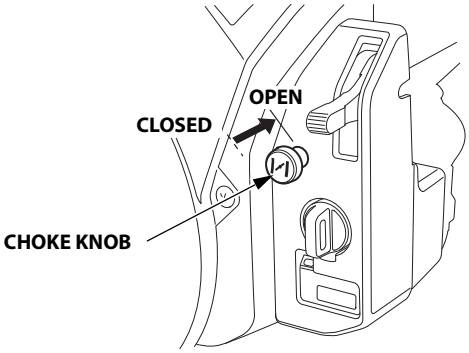

STOPPING THE ENGINE

To stop the engine in an emergency, simply turn the engine switch to the OFF position. Under normal conditions, use the following procedure. Refer to the instructions provided by the equipment manufacturer.

1. Move the throttle lever to the MIN. position.

   Some engine applications use a remote-mounted throttle control rather than the engine-mounted throttle lever shown here.

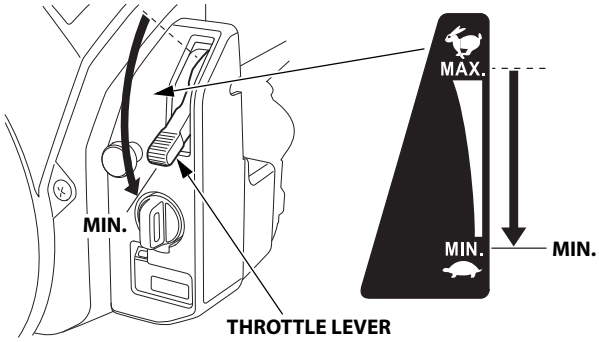

2. Turn the engine switch to the OFF position.

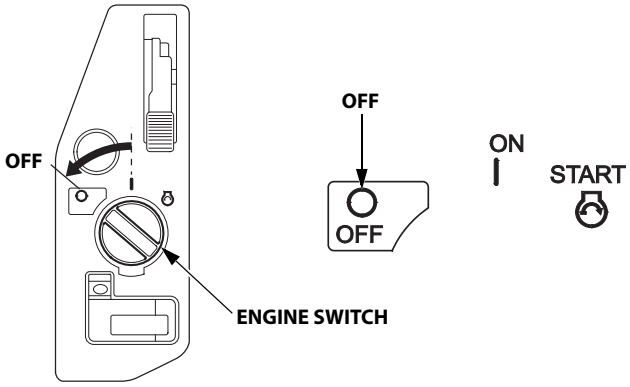

3. If the fuel tank is equipped with a valve, turn the fuel valve to the CLOSED or OFF position.

SETTING ENGINE SPEED

Position the throttle lever for the desired engine speed.

Some engine applications use a remote-mounted throttle control rather than the engine-mounted throttle lever shown here. Refer to the instructions provided by the equipment manufacturer.

For engine speed recommendations, refer to the instructions provided with the equipment powered by this engine.

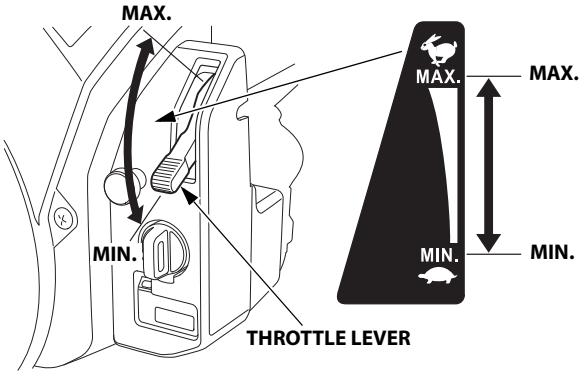

Do not disconnect the battery from the engine while the engine is running. Disconnecting the battery causes the fuel-cut solenoid to shut off the flow of fuel to the carburetor main jet, and the engine will stop.

SERVICING YOUR ENGINE

THE IMPORTANCE OF MAINTENANCE

Good maintenance is essential for safe, economical, and trouble-free operation. It will also help reduce pollution.

⚠ WARNING

Failure to properly maintain this engine, or failing to correct a problem before operation, could result in a significant malfunction.

Some malfunctions can cause serious injuries or death.

Always follow the inspection and maintenance recommendations and schedules in this owner's manual.

To help you properly care for your engine, the following pages include a maintenance schedule, routine inspection procedures, and simple maintenance procedures using basic hand tools. Other service tasks that are more difficult, or require special tools, are best handled by professionals and are normally performed by a Honda technician or other qualified mechanic.

The maintenance schedule applies to normal operating conditions. If you operate your engine under severe conditions, such as sustained high-load or high-temperature operation, or use in unusually wet or dusty conditions, consult your servicing dealer for recommendations applicable to your individual needs and use.

Maintenance, replacement, or repair of the emission control devices and systems may be performed by any engine repair establishment or individual, using parts that are ''certified'' to EPA standards.

MAINTENANCE SAFETY

Some of the most important safety precautions follow. However, we cannot warn you of every conceivable hazard that can arise in performing maintenance. Only you can decide whether or not you should perform a given task.

⚠ WARNING

Improper maintenance can cause an unsafe condition.

Failure to properly follow maintenance instructions and precautions can cause serious injuries or death.

Always follow the procedures and precautions in this owner's manual.

SAFETY PRECAUTIONS

- Make sure the engine is off before you begin any maintenance or repairs. To prevent accidental startup, disconnect the spark plug cap. This will eliminate several potential hazards:
  - **Carbon monoxide poisoning from engine exhaust.** Operate outside, away from open windows or doors.
  - **Burns from hot parts.** Let the engine and exhaust system cool before touching.
  - **Injury from moving parts.** Do not run the engine unless instructed to do so.

- Read the instructions before you begin, and make sure you have the tools and skills required.

- To reduce the possibility of fire or explosion, be careful when working around gasoline. Use only a non-flammable solvent, not gasoline, to clean parts. Keep cigarettes, sparks and flames away from all fuel related parts.

Remember that an authorized Honda servicing dealer knows your engine best and is fully equipped to maintain and repair it.

To ensure the best quality and reliability, use only new Honda Genuine parts or their equivalents for repair and replacement.

MAINTENANCE SCHEDULE

REGULAR SERVICE PERIOD (3) Perform at every indicated month or operating hour interval, whichever comes first. / ITEM		Each Use	First Month or 20 Hrs	Every 6 Months or 100 Hrs	Every Year or 300 Hrs	Every 2 Years or 500 Hrs	Refer to Page
Engine oil	Check level	o					8
	Change		o	o			8
Engine oil filter	Replace	Every 200 Hrs.					9
Air cleaner	Check	o					9
	Clean			o (1)			9
	Replace					o *	
Spark plug	Check-adjust			o			10
	Replace				o		
Spark arrester (applicable types)	Clean			o (4)			11
Idle speed	Check-adjust				o (2)		**
Valve clearance	Check-adjust				o (2)		**
Combustion chamber	Clean	After every 1000 Hrs. (2)					**
Fuel filter	Replace				o (2)		**
Fuel tube	Check	Every 2 years (Replace if necessary) (2)					**

* Replace the paper filter element only.
** Refer to the Shop Manual.

(1) Service more frequently when used in dusty areas.

(2) These items should be serviced by your servicing dealer, unless you have the proper tools and are mechanically proficient. Refer to the Honda shop manual for service procedures.

(3) For commercial use, log hours of operation to determine proper maintenance intervals.

(4) In Europe and other countries where the machinery directive 2006/42/EC is enforced, this cleaning should be done by your servicing dealer.

Failure to follow this maintenance schedule could result in non-warrantable failures.

REFUELING

Recommended Fuel

Unleaded gasoline		
	U.S.	Pump octane rating 86 or higher
	Except U.S.	Research octane rating 91 or higher
		Pump octane rating 86 or higher

This engine is certified to operate on unleaded gasoline with a pump octane rating of 86 or higher (a research octane rating of 91 or higher). Refuel in a well ventilated area with the engine stopped. If the engine has been running, allow it to cool first. Never refuel the engine inside a building where gasoline fumes may reach flames or sparks.
You may use unleaded gasoline containing no more than 10% ethanol (E10) or 5% methanol by volume. In addition, methanol must contain cosolvents and corrosion inhibitors. Use of fuels with content of ethanol or methanol greater than shown above may cause starting and/or performance problems. It may also damage metal, rubber, and plastic parts of the fuel system. Engine damage or performance problems that result from using a fuel with percentages of ethanol or methanol greater than shown above are not covered under the Warranty.

If your equipment will be used on an infrequent or intermittent basis, please refer to the fuel section of the STORING YOUR ENGINE chapter (see page 11) for additional information regarding fuel deterioration.

⚠ WARNING

Gasoline is highly flammable and explosive.

You can be burned or seriously injured when handling fuel.

- Stop the engine and let it cool before handling fuel.
- Keep heat, sparks, and flame away.
- Handle fuel only outdoors.
- Keep away from your vehicle.
- Wipe up spills immediately.

NOTICE

Fuel can damage paint and some types of plastic. Be careful not to spill fuel when filling your fuel tank. Damage caused by spilled fuel is not covered under the Distributor's Limited Warranty.

Never use gasoline that is stale, contaminated, or mixed with oil. Avoid getting dirt or water in the fuel tank.

With the engine stopped and on a level surface, remove the fuel filler cap and check the fuel level. Refill the tank if the fuel level is low.
Refer to the instructions provided with the equipment powered by this engine for refuelling.

Refuel in a well-ventilated area before starting the engine. If the engine has been running, allow it to cool. Refuel carefully to avoid spilling fuel. It may be necessary to lower the fuel level depending on operating conditions. After refueling, tighten the fuel tank cap securely.

Keep gasoline away from appliance pilot lights, barbecues, electric appliances, power tools, etc.

Spilled fuel is not only a fire hazard, it causes environmental damage. Wipe up spills immediately.

ENGINE OIL

Oil is a major factor affecting performance and service life.
Use 4-stroke automotive detergent oil.

Recommended Oil

Use 4-stroke motor oil that meets or exceeds the requirements for API service category SJ or later (or equivalent). Always check the API service label on the oil container to be sure it includes the letters SJ or later (or equivalent).

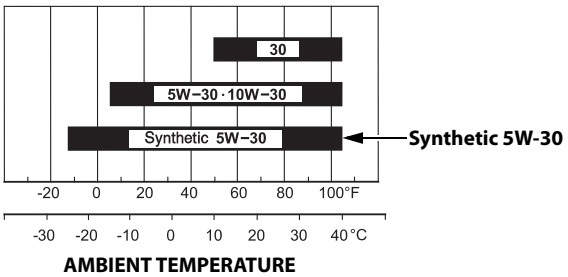

SAE 10W-30 or 5W-30 is recommended for general use. Use a full synthetic 5W-30 for starting/operating temperatures between 5°F (–15°C) and –13°F (–25°C). Other viscosities shown in the chart may be used when the average temperature in your area is within the indicated range.

Oil Level Check

Check the engine oil level with the engine stopped and in a level position.

1. Start the engine and let it idle for 1 or 2 minutes. Stop the engine and wait for 2 or 3 minutes.
2. Remove the oil level dipstick and wipe it clean.
3. Fully insert the oil level dipstick, and then remove it to check the oil level.
4. If the oil level is low, remove the oil filler cap, and fill with the recommended oil to the upper limit mark on the oil level dipstick.
5. Reinstall the oil level dipstick and oil filler cap.

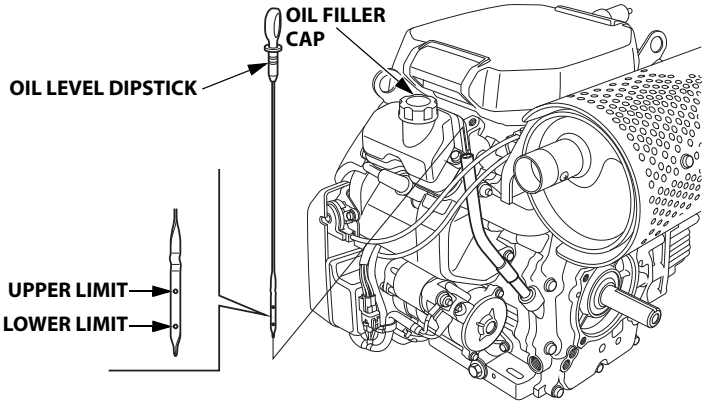

NOTICE

Running the engine with a low oil level can cause engine damage. This type of damage is not covered by the Distributor's Limited Warranty.

The Oil Alert system (applicable types) will automatically stop the engine before the oil level falls below the safe limit. However, to avoid the inconvenience of an unexpected shutdown, always check the engine oil level before startup.

Oil Change

Drain the used oil when the engine is warm. Warm oil drains quickly and completely.

1. Place a suitable container below the engine to catch the used oil, and then remove the oil filler cap, drain bolt, and sealing washer.
2. Allow the used oil to drain completely, then reinstall the drain bolt and new sealing washer, and tighten the drain bolt securely.

   TORQUE: 45.0 N·m (4.5 kgf·m, 33 lbf·ft)

   Please dispose of used motor oil in a manner that is compatible with the environment. We suggest you take used oil in a sealed container to your local recycling center or service station for reclamation. Do not throw it in the trash, pour it on the ground, or pour it down a drain.

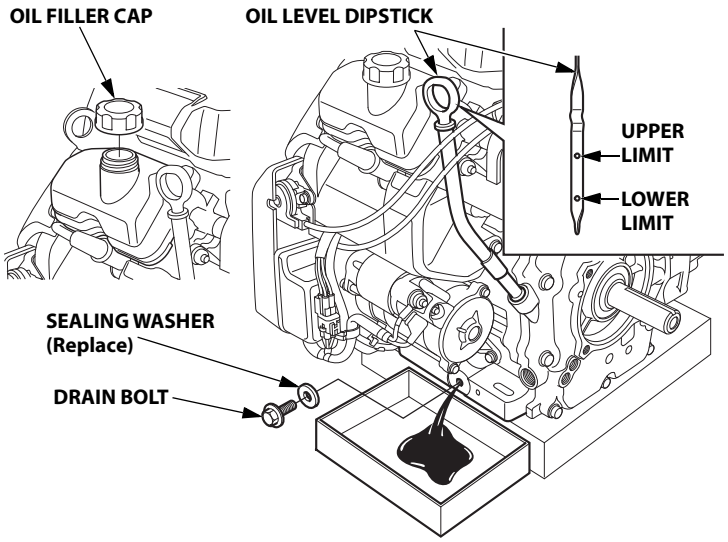

3. With the engine in a level position, fill with the recommended oil to the upper limit mark on the oil level dipstick.

   Engine oil capacity:
   Without oil filter replacement: 1.5 L (1.6 US qt, 1.3 Imp qt)
   With oil filter replacement: 1.7 L (1.8 US qt, 1.5 Imp qt)

   NOTICE

   Running the engine with a low oil level can cause engine damage. This type of damage is not covered by the Distributor's Limited Warranty.

   The Oil Alert system (applicable types) will automatically stop the engine before the oil level falls below the safe limit.
   However, to avoid the inconvenience of an unexpected shutdown, fill to the upper limit, and check the oil level regularly.

4. Reinstall the oil filler cap and oil level dipstick securely.

OIL FILTER

Change

1. Drain the engine oil, and retighten the drain bolt securely.

2. Remove the oil filter, and drain the oil into a suitable container. Dispose the used oil and filter in a manner compatible with the environment.

   NOTICE

   Use an oil filter socket, rather than a strap wrench, to avoid striking and damaging the oil pressure switch.

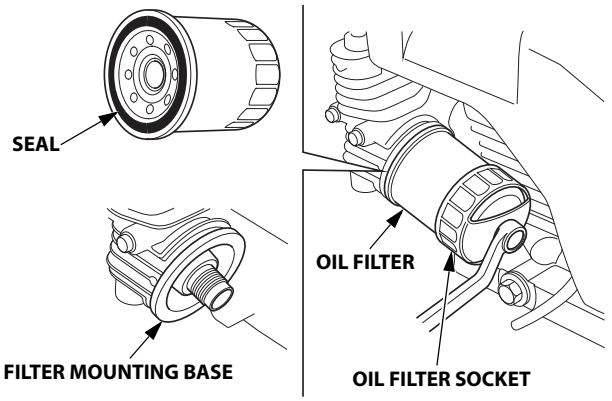

3. Clean the filter mounting base, and coat the seal of the new oil filter with clean engine oil.

   NOTICE

   Use only a Honda Genuine oil filter or a filter of equivalent quality specified for your model. Using the wrong filter, or a non-Honda filter which is not of equivalent quality, may cause engine damage.

4. Screw on the new oil filter by hand until the seal contacts the filter mounting base, and then use an oil filter socket tool to tighten the filter an additional 3/4 turn.

   Oil filter tightening torque: 12 N·m (1.2 kgf·m, 9 lbf·ft)

5. Refill the crankcase with the specified amount of the recommended oil (see page 8). Reinstall the oil filler cap and oil level dipstick.

6. Start the engine, and check for leaks.

7. Stop the engine, and check the oil level as described on page 8. If necessary, add oil to bring the oil level to the upper limit mark on the oil level dipstick.

AIR CLEANER

A dirty air cleaner will restrict air flow to the carburetor, reducing engine performance. If you operate the engine in very dusty areas, clean the air filter more often than specified in the MAINTENANCE SCHEDULE (see page 7).

NOTICE

Operating the engine without an air filter, or with a damaged air filter, will allow dirt to enter the engine, causing rapid engine wear. This type of damage is not covered by the Distributor's Limited Warranty.

Inspection

Remove the air cleaner cover and inspect the filter elements.
Clean or replace dirty filter elements. Always replace damaged filter elements.

Cleaning

1. Pull the air cleaner cover latch to the unlocked position, and remove the cover.

2. Remove the wing nut from the paper filter element.

3. Remove the paper filter element and foam filter element from the air cleaner case.

4. Remove the foam filter element from the paper filter element.

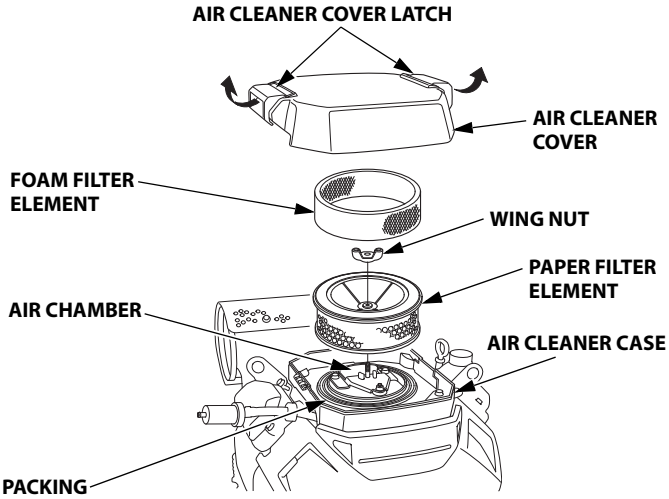

5. Inspect both filter elements, and replace them if they are damaged. Always replace the paper filter element at the scheduled interval (see page 7).

6. Clean the filter elements if they are to be reused.

   Paper filter element: Tap the filter element several times on a hard surface to remove dirt, or blow compressed air [not exceeding 207 kPa (2.1 kgf/cm^2, 30 psi)] through the filter element from the air cleaner case side.

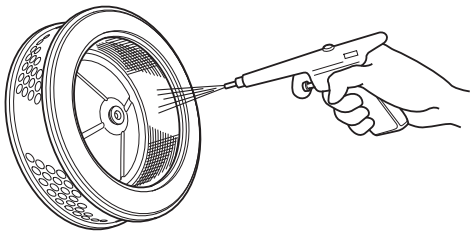

   Never try to brush off dirt; brushing will force dirt into the fibers. Replace the paper filter element if it is excessively dirty.

   Foam filter element: Clean in warm soapy water, rinse, and allow to dry thoroughly. Or clean in non-flammable solvent and allow to dry. Dip the filter element in clean engine oil, and then squeeze out all excess oil. The engine will smoke when started if too much oil is left in the foam.

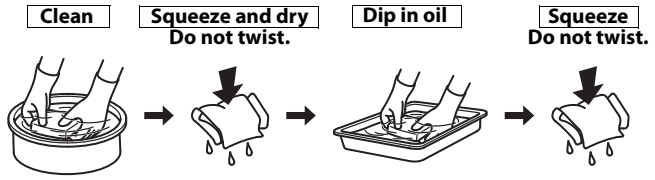

7. Wipe dirt from the inside of the air cleaner body and cover, using a moist rag. Be careful to prevent dirt from entering the air chamber that leads to the carburetor.

8. Place the foam filter element over the paper filter element, and reinstall the assembled filter element. Be sure the packing is in place beneath the filter element. Tighten the wing nut securely.

9. Lock the air cleaner cover latch securely.

SPARK PLUG

Recommended Spark Plug: ZFR5F (NGK)
FR2A (NGK)

The recommended spark plug has the correct heat range for normal engine operating temperatures.

NOTICE

Incorrect spark plugs can cause engine damage.

If the engine has been running, let it cool before servicing the spark plugs.

For good performance, the spark plugs must be properly gapped and free of deposits.

1. Disconnect the spark plug caps, and remove any dirt from around the spark plug area.

2. Remove the spark plugs with a 5/8-inch spark plug wrench.

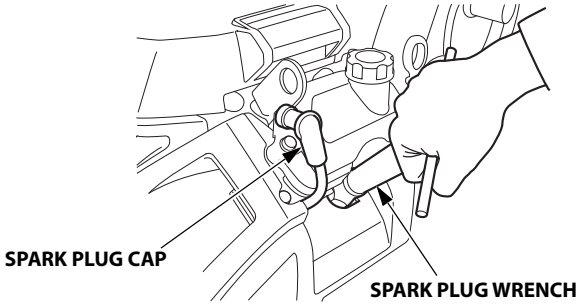

3. Inspect the spark plugs. Replace them if damaged, badly fouled, if the sealing washer is in poor condition, or if the electrode is worn.

4. Measure the spark plug electrode gaps with a wire-type feeler gauge. Correct the gap, if necessary, by carefully bending the side electrode.
   The gap should be:
   0.7–0.8 mm
   (0.028–0.031 in)

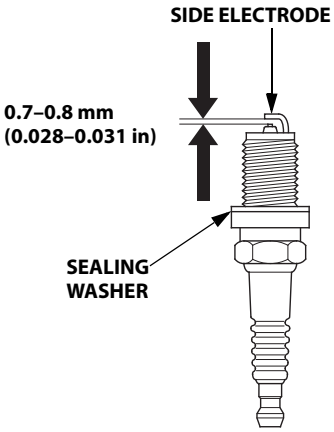

5. Install the spark plug carefully, by hand, to avoid cross-threading.

6. After the spark plug is seated, tighten with a 5/8-inch spark plug wrench to compress the sealing washer.

   When installing a new spark plug, tighten 1/2 turn after the spark plug seats to compress the washer.

   When reinstalling the original spark plug, tighten 1/8–1/4 turn after the spark plug seats to compress the washer.

   TORQUE: 18.0 N·m (1.8 kgf·m, 13 lbf·ft)

   NOTICE

   A loose spark plug can overheat and damage the engine. Overtightening the spark plug can damage the threads in the cylinder head.

7. Attach the spark plug caps to the spark plugs.

SPARK ARRESTER (applicable types)
In Europe and other countries where the machinery directive 2006/42/EC is enforced, this cleaning should be done by your servicing dealer.

Your engine is not factory-equipped with a spark arrester. The spark arrester is optional part. In some areas, it is illegal to operate an engine without a spark arrester. Check local laws and regulations. A spark arrester is available from authorized Honda servicing dealers.

The spark arrester must be serviced every 100 hours to keep it functioning as designed.

If the engine has been running, the muffler will be hot. Allow it to cool before servicing the spark arrester.

Spark Arrester Cleaning & Inspection

1. Remove the spark arrester:

   HIGH-MOUNT MUFFLER TYPE: Remove the special screw from the muffler and remove the spark arrester.

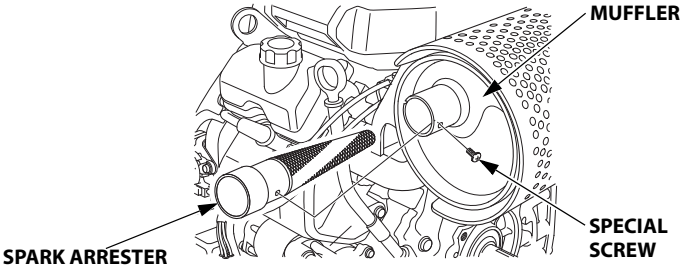

   SIDE-MOUNT MUFFLER TYPE: Remove the 6 mm flange bolts from the muffler protector and remove the muffler protector. Remove the special screws from the spark arrester and remove the spark arrester from the muffler.

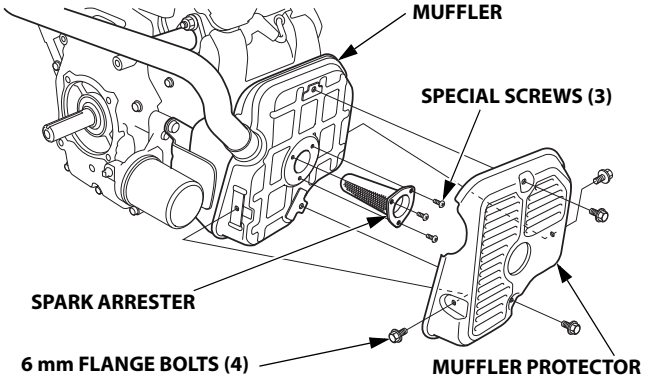

2. Use a brush to remove carbon deposits from the spark arrester screen. Be careful to avoid damaging the screen.

   The spark arrester must be free of breaks and holes. Replace the spark arrester if it is damaged.

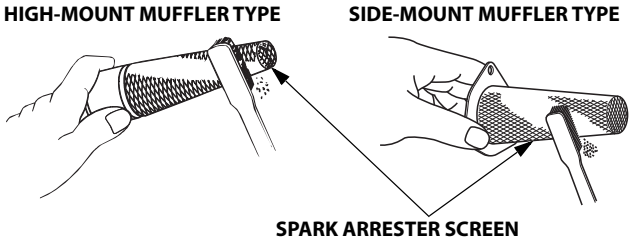

3. Install the spark arrester and muffler protector in the reverse order of disassembly.

HELPFUL TIPS & SUGGESTIONS

STORING YOUR ENGINE

Storage Preparation
Proper storage preparation is essential for keeping your engine trouble-free and looking good. The following steps will help to keep rust and corrosion from impairing your engine's function and appearance, and will make the engine easier to start when you use it again.

Cleaning
If the engine has been running, allow it to cool for at least half an hour before cleaning. Clean all exterior surfaces, touch up any damaged paint, and coat other areas that may rust with a light film of oil.

NOTICE
Using a garden hose or pressure washing equipment can force water into the air cleaner or muffler opening. Water in the air cleaner will soak the air filter, and water that passes through the air filter or muffler can enter the cylinder, causing damage.

Fuel

NOTICE
Depending on the region where you operate your equipment, fuel formulations may deteriorate and oxidize rapidly. Fuel deterioration and oxidation can occur in as little as 30 days and may cause damage to the carburetor and/or fuel system. Please check with your servicing dealer for local storage recommendations.

Gasoline will oxidize and deteriorate in storage. Deteriorated gasoline will cause hard starting, and it leaves gum deposits that clog the fuel system. If the gasoline in your engine deteriorates during storage, you may need to have the carburetor and other fuel system components serviced or replaced.
The length of time that gasoline can be left in your fuel tank and carburetor without causing functional problems will vary with such factors as gasoline blend, your storage temperatures, and whether the fuel tank is partially or completely filled. The air in a partially filled fuel tank promotes fuel deterioration. Very warm storage temperatures accelerate fuel deterioration. Fuel deterioration problems may occur within a few months, or even less if the gasoline was not fresh when you filled the fuel tank.

Fuel system damage or engine performance problems resulting from neglected storage preparation are not covered under the *Distributor's Limited Warranty*.

You can extend fuel storage life by adding a gasoline stabilizer that is formulated for that purpose, or you can avoid fuel deterioration problems by draining the fuel tank and carburetor.

Adding a Gasoline Stabilizer to Extend Fuel Storage Life

When adding a gasoline stabilizer, fill the fuel tank with fresh gasoline. If only partially filled, air in the tank will promote fuel deterioration during storage. If you keep a container of gasoline for refueling, be sure that it contains only fresh gasoline.

1. Add gasoline stabilizer following the manufacturer's instructions.

2. After adding a gasoline stabilizer, run the engine outdoors for 10 minutes to be sure that treated gasoline has replaced the untreated gasoline in the carburetor.

3. Stop the engine, and if the fuel tank is equipped with a fuel valve, move the fuel valve to the CLOSED or OFF position.

Draining the Fuel Tank and Carburetor

⚠ WARNING

Gasoline is highly flammable and explosive.

You can be burned or seriously injured when handling fuel.

- Stop the engine and let it cool before handling fuel.
- Keep heat, sparks, and flame away.
- Handle fuel only outdoors.
- Keep away from your vehicle.
- Wipe up spills immediately.

1. Disconnect the fuel line to the engine, and drain the fuel tank into an approved gasoline container. If the fuel tank is equipped with a valve, turn the fuel valve to the OPEN or ON position to enable draining. After draining is completed, reconnect the fuel line.

2. Loosen the carburetor drain screw, and drain the carburetor into an approved gasoline container. After draining is completed, tighten the carburetor drain screw securely.

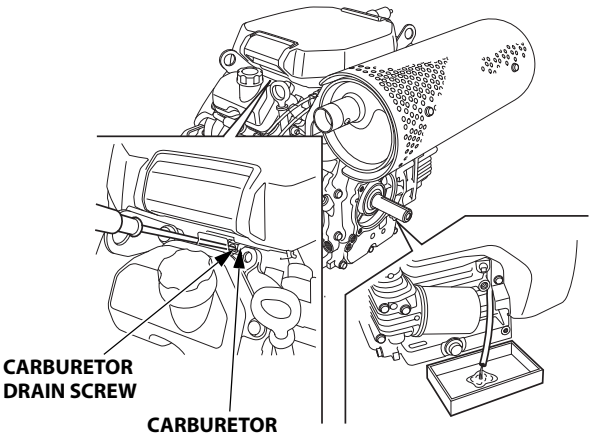

Engine Oil

1. Change the engine oil (see page 8).

2. Remove the spark plugs (see page 10).

3. Pour 5–10 cm^3 (5–10 cc, 1–2 teaspoons) of clean engine oil into each cylinder.

4. Turn the engine for a few seconds by turning the engine switch to the START position to distribute the oil in the cylinders.

5. Reinstall the spark plugs.

Storage Precautions

If your engine will be stored with gasoline in the fuel tank and carburetor, it is important to reduce the hazard of gasoline vapor ignition. Select a well ventilated storage area away from any appliance that operates with a flame, such as a furnace, water heater, or clothes dryer. Also avoid any area with a spark-producing electric motor, or where power tools are operated.

If possible, avoid storage areas with high humidity, because that promotes rust and corrosion.

Keep the engine level in storage. Tilting can cause fuel or oil leakage.

Unless all fuel has been drained from the fuel tank, leave the fuel valve in the CLOSED or OFF position to reduce the possibility of fuel leakage.

With the engine and exhaust system cool, cover the engine to keep out dust. A hot engine and exhaust system can ignite or melt some materials. Do not use a plastic sheet as a dust cover.
A nonporous cover will trap moisture around the engine, promoting rust and corrosion.

If installed, remove the battery and store it in a cool, dry place. Recharge the battery once a month while the engine is in storage. This will help to extend the service life of the battery.

Removal from Storage

Check your engine as described in the *BEFORE OPERATION CHECKS* section of this manual (see page 4).

If the fuel was drained during storage preparation, fill the tank with fresh gasoline. If you keep a container of gasoline for refueling, be sure it contains only fresh gasoline. Gasoline oxidizes and deteriorates over time, causing hard starting.

If the cylinders were coated with oil during storage preparation, the engine may smoke briefly at startup. This is normal.

TRANSPORTING

If the engine has been running, allow it to cool for at least 15 minutes before loading the engine-powered equipment on the transport vehicle. A hot engine and exhaust system can burn you and can ignite some materials.

Keep the engine level when transporting to reduce the possibility of fuel leakage. If the fuel tank is equipped with a fuel valve, move the fuel valve lever to the CLOSED or OFF position.

TAKING CARE OF UNEXPECTED PROBLEMS

ENGINE WILL NOT START

Possible Cause	Correction
Battery discharged.	Recharge battery.
Fuse burnt out.	Replace fuse.
Fuel valve CLOSED or OFF. (If equipped)	Move lever to OPEN or ON position.
Choke OPEN.	Move knob to CLOSED position unless the engine is warm (p. 4).
Engine switch OFF.	Turn engine switch to ON position (p. 5).
Engine oil level low (Oil Alert stops engine).	Fill with the recommended oil to the proper level (p. 8).
Out of fuel.	Refuel (p. 7).
Stale fuel; engine stored without treating or draining gasoline, or refueled with stale gasoline.	Drain fuel tank and carburetor (p. 12). Refuel with fresh gasoline (p. 7).
Spark plugs faulty, fouled, or improperly gapped.	Gap, or replace spark plugs (p. 10).
Spark plugs wet with fuel (flooded engine).	Dry and reinstall spark plugs (p. 10). Start engine with throttle lever in MAX. position (p. 6).
Fuel filter restricted, carburetor malfunction, ignition malfunction, valves stuck, etc.	Take engine to your servicing dealer, or refer to shop manual.

ENGINE LACKS POWER

Possible Cause	Correction
Filter element(s) restricted.	Clean or replace filter element(s) (p. 9).
Stale fuel; engine stored without treating or draining gasoline, or refueled with stale gasoline.	Drain fuel tank and carburetor (p. 12). Refuel with fresh gasoline (p. 7).
Fuel filter restricted, carburetor malfunction, ignition malfunction, valves stuck, etc.	Take engine to your servicing dealer, or refer to shop manual.

FUSE REPLACEMENT

The electric starter relay circuit and battery charging circuit are protected by a 30-ampere fuse. If the fuse burns out, the electric starter will not operate.

1. Disconnect the wire connector, and remove the wire harnesses from the wire harness band.

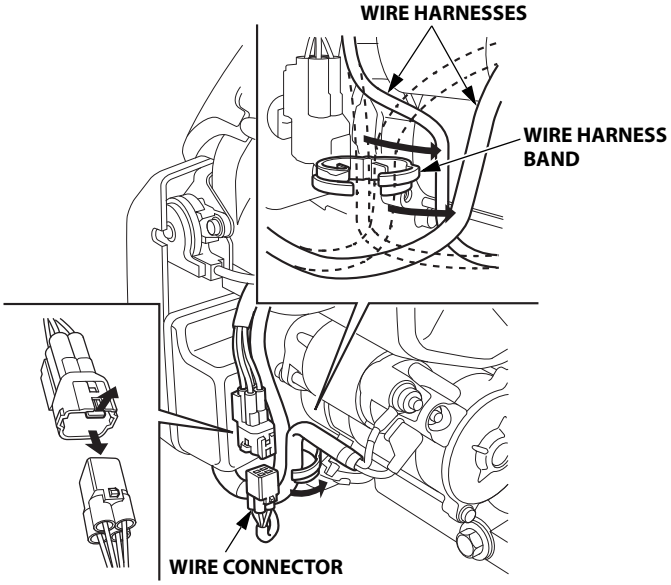

2. Remove the 6×8 mm special screw from the rear cover of the engine switch box, and remove the rear cover.

3. Remove the fuse cover, and inspect the fuse.

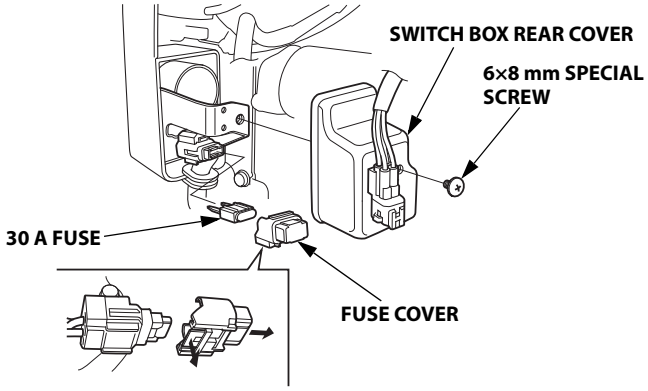

If the fuse is burnt out, remove the fuse cover, then pull out and discard the burnt-out fuse. Install a new 30-ampere fuse, and reinstall the fuse cover.

NOTICE

Never use a fuse with a rating greater than 30 amperes. Serious damage to the electrical system or a fire could result.

4. Reinstall the rear cover. Install the 6×8 mm special screw and tighten it securely.

Frequent fuse failure usually indicates a short circuit or an overload in the electrical system. If the fuse burns out frequently, take the engine to a Honda servicing dealer for repair.

TECHNICAL INFORMATION

Serial Number Location

Record the engine serial number, type and purchase date in the spaces below. You will need this information when ordering parts and when making technical or warranty inquiries.

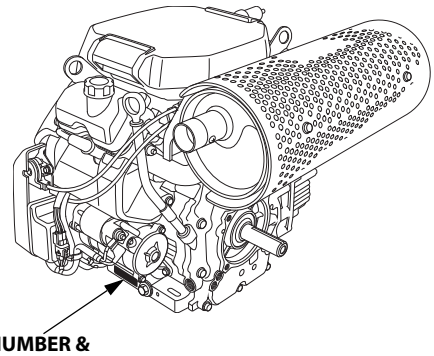

SERIAL NUMBER & ENGINE TYPE LOCATION

Engine serial number: __ __ __ __ — __ __ __ __ __ __ __

Engine type: ___ ___ ___ ___

Date Purchased: _____ / _____ / _____

Battery Connections for Electric Starter

Recommended Battery

GX630	12 V–36 Ah
GX690	

Be careful not to connect the battery in reverse polarity, as this will short circuit the battery charging system. Always connect the positive (+) battery cable to the battery terminal before connecting the negative (–) battery cable, so your tools cannot cause a short circuit if they touch a grounded part while tightening the positive (+) battery cable end.

⚠ WARNING

A battery can explode if you do not follow the correct procedure, seriously injuring anyone nearby.

Keep all sparks, open flames, and smoking materials away from the battery.

⚠ WARNING

The battery contains sulfuric acid (electrolyte), which is highly corrosive and poisonous.

Getting electrolyte in your eyes or on your skin can cause serious burns.

Wear protective clothing and eye protection when working near the battery.

KEEP CHILDREN AWAY FROM THE BATTERY.

WARNING: Battery posts, terminals, and related accessories contain lead and lead compounds. **Wash hands after handling.**

1. Connect the battery positive (+) cable to the starter solenoid terminal as shown.
2. Connect the battery negative (–) cable to an engine mounting bolt, frame bolt, or other good engine ground connection.
3. Connect the battery positive (+) cable to the battery positive (+) terminal as shown.
4. Connect the battery negative (–) cable to the battery negative (–) terminal as shown.
5. Coat the terminals and cable ends with grease.

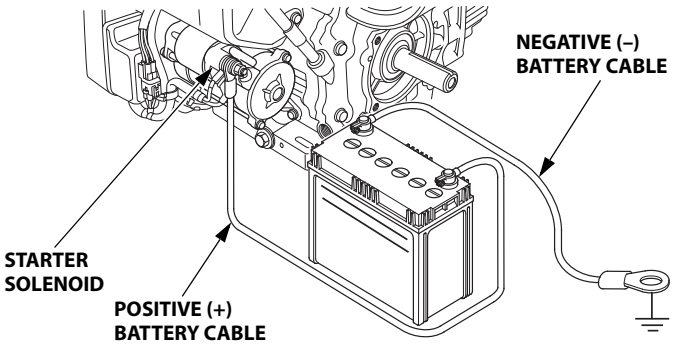

Remote Control Linkage

The throttle and choke control levers are provided with holes for optional cable attachment. The following illustrations show installation examples for a solid wire cable and for a flexible, braided wire cable.

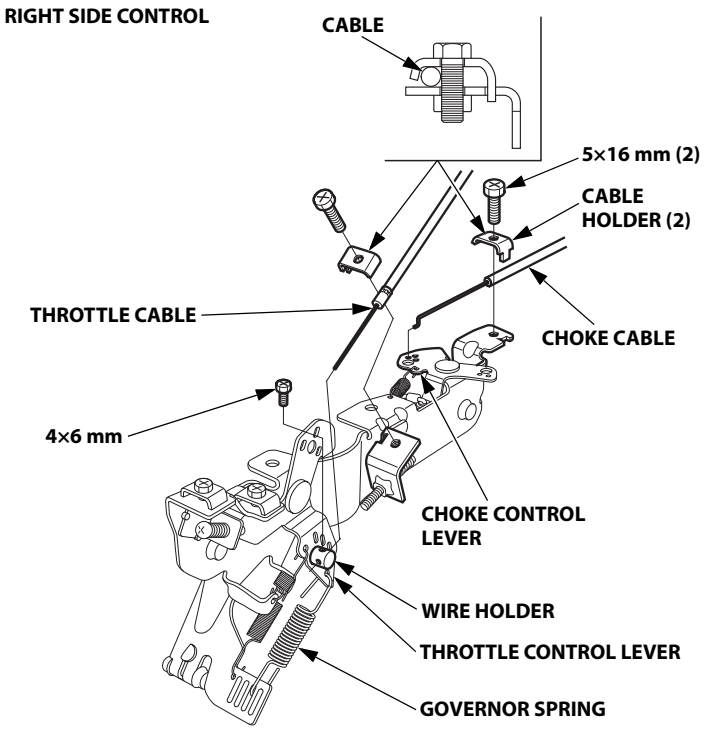

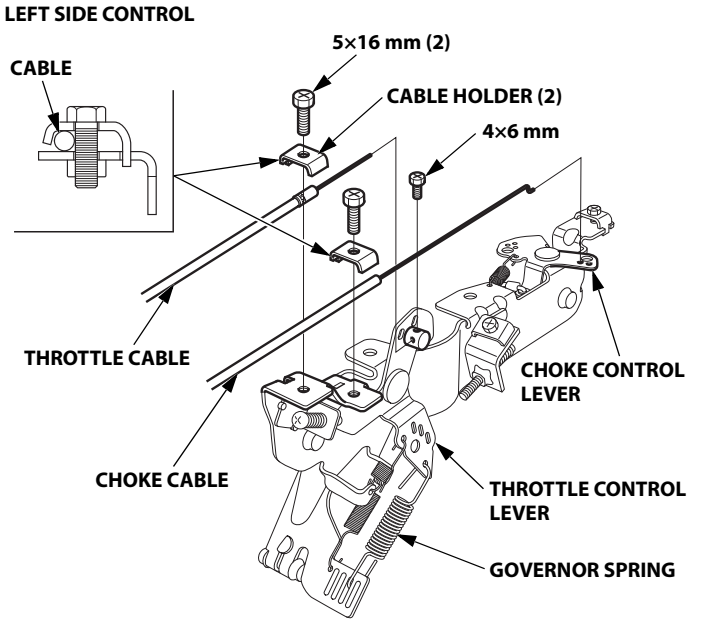

WIRE HOLDER

- **For Throttle Cable**

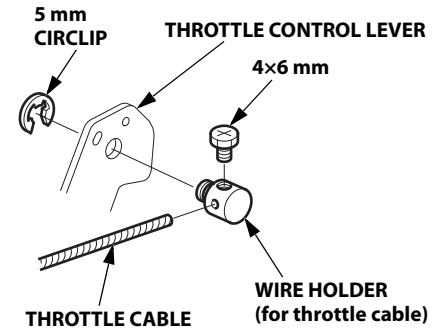

- **For Choke Cable**

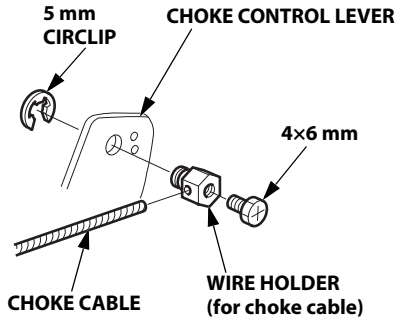

Carburetor Modifications for High Altitude Operation

At high altitude, the standard carburetor air-fuel mixture will be too rich. Performance will decrease, and fuel consumption will increase. A very rich mixture will also foul the spark plug and cause hard starting. Operation at an altitude that differs from that at which this engine was certified, for extended periods of time, may increase emissions.

High altitude performance can be improved by specific modifications to the carburetor. If you always operate your engine at altitudes above 610 meters (2,000 feet), have your servicing dealer perform this carburetor modification. This engine, when operated at high altitude with the carburetor modifications for high altitude use, will meet each emission standard throughout its useful life.

Even with carburetor modification, engine horsepower will decrease about 3.5% for each 300 meter (1,000 foot) increase in altitude. The effect of altitude on horsepower will be greater than this if no carburetor modification is made.

NOTICE

When the carburetor has been modified for high altitude operation, the air-fuel mixture will be too lean for low altitude use. Operation at altitudes below 610 meters (2,000 feet) with a modified carburetor may cause the engine to overheat and result in serious engine damage. For use at low altitudes, have your servicing dealer return the carburetor to original factory specifications.

EMISSION CONTROL SYSTEM INFORMATION

Source of Emissions

The combustion process produces carbon monoxide, oxides of nitrogen, and hydrocarbons. Control of hydrocarbons and oxides of nitrogen is very important because, under certain conditions, they react to form photochemical smog when subjected to sunlight. Carbon monoxide does not react in the same way, but it is toxic.
Honda utilizes appropriate air/fuel ratios and other emissions control systems to reduce the emissions of carbon monoxide, oxides of nitrogen, and hydrocarbons.
Additionally, Honda fuel systems utilize components and control technologies to reduce evaporative emissions.

The U.S. and California Clean Air Acts, and Environment and Climate Change Canada (ECCC)

U.S. EPA, California and Canadian regulations require all manufacturers to furnish written instructions describing the operation and maintenance of emission control systems.
The following instructions and procedures must be followed in order to keep the emissions from your Honda engine within the emission standards.

Tampering and Altering

NOTICE

Tampering is a violation of federal and California law.

Tampering with or altering the emission control system may increase emissions beyond the legal limit. Among those acts that constitute tampering are:

- Removal or alteration of any part of intake, fuel, or exhaust systems.
- Alterations that would cause the engine to operate outside its design parameters.

Problems That May Affect Emissions

If you are aware of any of the following symptoms, have your engine inspected and repaired by your authorized Honda Power Equipment dealer.

- Hard starting or stalling after starting.
- Rough idle.
- Misfiring or backfiring under load.
- Afterburning (backfiring).
- Black exhaust smoke or high fuel consumption.

Replacement Parts

The emissions control systems on your new Honda engine were designed, built, and certified to conform with EPA, California (models certified for sale in California only), and Canadian emissions regulations. We recommend the use of Honda Genuine parts whenever you have maintenance done. These original design replacement parts are manufactured to the same standards as the original parts, so you can be confident of their performance. Honda cannot deny coverage under the emission warranty solely for the use of non-Honda replacement parts or service performed at a location other than an authorized Honda dealership; you may use comparable EPA certified parts, and have service performed at non-Honda locations. However, the use of replacement parts that are not of the original design and quality may impair the effectiveness of your emissions control system.
A manufacturer of an aftermarket part assumes the responsibility that the part will not adversely affect emissions performance. The manufacturer or rebuilder of the part must certify that use of the part will not result in a failure of the engine to comply with emissions regulations.

Maintenance

As the power equipment engine owner, you are responsible for completing all required maintenance listed in your owner's manual. Honda recommends that you retain all receipts covering maintenance on your power equipment engine, but Honda cannot deny warranty coverage solely for the lack of receipts or for your failure to ensure that all scheduled maintenance has been completed.
Follow the "MAINTENANCE SCHEDULE" on page 7.
Remember that this schedule is based on the assumption that your Honda engine product will be used for its designed purpose. Sustained high-load or high-temperature operation, or use in dusty conditions, will require more frequent service.

Air Index
(Models certified for sale in California)

An Air Index Information label is applied to engines certified to an emission durability time period in accordance with the requirements of the California Air Resources Board.
The bar graph is intended to provide you, our customer, the ability to compare the emissions performance of available engines. The lower the Air Index, the less pollution.
The durability description is intended to provide you with information relating to the engine's emission durability period. The descriptive term indicates the useful life period for the engine's emission control system.
See your "EMISSION CONTROL SYSTEM WARRANTY" (see page 17) for additional information.

Descriptive Term	Applicable to Emission Durability Period
Moderate	50 hours (0–80 cc, inclusive) 125 hours (greater than 80 cc)
Intermediate	125 hours (0–80 cc, inclusive) 250 hours (greater than 80 cc)
Extended	300 hours (0–80 cc, inclusive) 500 hours (greater than 80 cc) 1,000 hours (225 cc and greater)

EMISSION CONTROL SYSTEM WARRANTY

Your Honda Power Equipment engine is designed, built, and equipped to meet the U.S. EPA, Environment Canada, and California Air Resources Board (models certified for sale in California only) emission standard for spark ignited engines. American Honda Motor provides the emission warranty coverage for engines in the United States and its territories. Honda Canada provides the emission warranty for engines in the 13 provinces and territories of Canada.

Warranty Coverage

Honda Power Equipment engines certified to the U.S. EPA, Environment Canada, and State of California (models certified for sale in California only) emission regulations are covered by this warranty to be free from defects in materials and workmanship that may keep it from meeting the applicable U.S. EPA , CARB and Canadian emissions requirements for a minimum of 2 years or the length of the Honda Power Equipment Distributor's Limited Warranty, whichever is longer, from the original date of delivery to the retail purchaser. This warranty is transferable to each subsequent purchaser for the duration of the warranty period. Warranty repairs will be made without charge for diagnosis, parts, and labor. Information about how to make a warranty claim, as well as a description of how a claim can be made and/or how service can be provided, can be obtained by contacting an authorized Honda Power Equipment dealer or by contacting the following:

American Honda
Email: powerequipmentemissions@ahm.honda.com
Telephone: (888) 888-3139

Honda Canada
Telephone: (888) 946-6329

The covered components include all components whose failure would increase an engine's emissions of any regulated pollutant or evaporative emissions. A list of specific components can be found in the separately included emissions warranty statement.

Specific warranty terms, coverage, limitations, and manner of seeking warranty service are also set forth in the separately included emissions warranty statement. In addition, the emission warranty statement can also be found on the Honda Power equipment website or at the following link:

http://powerequipment.honda.com/support/warranty

Specifications

GX630 (QAF-Type)

Length×Width×Height	405×410×438 mm (15.9×16.1×17.2 in)
Dry mass [weight]	44.4 kg (97.9 lbs)
Engine type	4-stroke, overhead valve, 2 cylinders (90° V-Twin)
Displacement [Bore×Stroke]	688.0 cm^3 (41.97 cu-in) [78.0×72.0 mm (3.07×2.83 in)]
Net power (in accordance with SAE J1349*)	15.5 kW (21.1 PS, 20.8 bhp) at 3,600 min^{-1}(rpm)
Max. Net torque (in accordance with SAE J1349*)	48.3 N·m (4.93 kgf·m, 35.6 lbf·ft) at 2,500 min^{-1}(rpm)
Engine oil capacity	Without oil filter replacement: 1.5 L (1.6 US qt, 1.3 lmp qt) With oil filter replacement: 1.7 L (1.8 US qt, 1.5 lmp qt)
Cooling system	Forced air
Ignition system	CDI type magneto ignition
PTO shaft rotation	Counterclockwise

GX690 (TAF-Type)

Length×Width×Height	429×410×438 mm (16.9×16.1×17.2 in)
Dry mass [weight]	44.6 kg (98.3 lbs)
Engine type	4-stroke, overhead valve, 2 cylinders (90° V-Twin)
Displacement [Bore×Stroke]	688.0 cm^3 (41.97 cu-in) [78.0×72.0 mm (3.07×2.83 in)]
Net power (in accordance with SAE J1349*)	16.5 kW (22.4 PS, 22.1 bhp) at 3,600 min^{-1}(rpm)
Max. Net torque (in accordance with SAE J1349*)	48.3 N·m (4.93 kgf·m, 35.6 lbf·ft) at 2,500 min^{-1}(rpm)
Engine oil capacity	Without oil filter replacement: 1.5 L (1.6 US qt, 1.3 lmp qt) With oil filter replacement: 1.7 L (1.8 US qt, 1.5 lmp qt)
Cooling system	Forced air
Ignition system	CDI type magneto ignition
PTO shaft rotation	Counterclockwise

* The power rating of the engine indicated in this document is the net power output tested on a production engine for the engine model and measured in accordance with SAE J1349 at 3,600 min^{-1}(rpm) (Net Power) and at 2,500 min^{-1}(rpm) (Max. Net Torque). Mass production engines may vary from this value.
Actual power output for the engine installed in the final machine will vary depending on numerous factors, including the operating speed of the engine in application, environmental conditions, maintenance, and other variables.

Tuneup Specifications GX630/690

ITEM	SPECIFICATION	MAINTENANCE
Spark plug gap	0.7–0.8 mm (0.028–0.031 in)	Refer to page 10
Idle speed	1,400±150 min^{-1}(rpm)	See your servicing dealer
Valve clearance (cold)	IN: 0.08±0.02 mm EX: 0.10±0.02 mm	See your servicing dealer
Other specifications	No other adjustments needed.	

Quick Reference Information

Fuel	Unleaded gasoline (Refer to page 7).	
	U.S.	Pump octane rating 86 or higher
	Except U.S.	Research octane rating 91 or higher Pump octane rating 86 or higher
Engine oil	SAE 10W-30, API SJ or later, for general use. Refer to page 8.	
Spark plug	ZFR5F (NGK), FR2A (NGK)	
Maintenance	Before each use: • Check engine oil level. Refer to page 8. • Check air filter. Refer to page 9.	
	First 20 hours: Change engine oil. Refer to page 8.	
	Subsequent: Refer to the maintenance schedule on page 7.	

Wiring Diagrams

(A)	MAIN FUSE
(B)	ENGINE SWITCH
(C)	OIL LEVEL SWITCH
(D)	FUEL CUT SOLENOID
(E)	STARTER MOTOR
(F)	BATTERY
(G)	CHARGE COIL
(H)	LEFT IGNITION COIL
(I)	LEFT SPARK PLUG
(J)	RIGHT IGNITION COIL
(K)	RIGHT SPARK PLUG
(L)	REGULATOR RECTIFIER
(M)	HOUR METER
(N)	CONTROL BOX

Bl	Black
Br	Brown
Bu	Blue
G	Green
Gr	Gray
Lb	Light blue
Lg	Light green
O	Orange
P	Pink
R	Red
W	White
Y	Yellow

2.7 A Charge Coil and Without Control Box Type

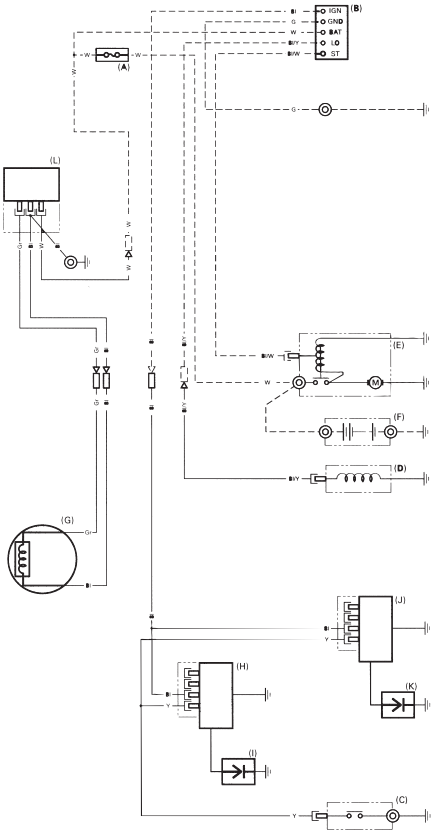

	IGN	GND	BAT	LO	ST
OFF					
ON					
START					

2.7 A Charge Coil and With Control Box Type

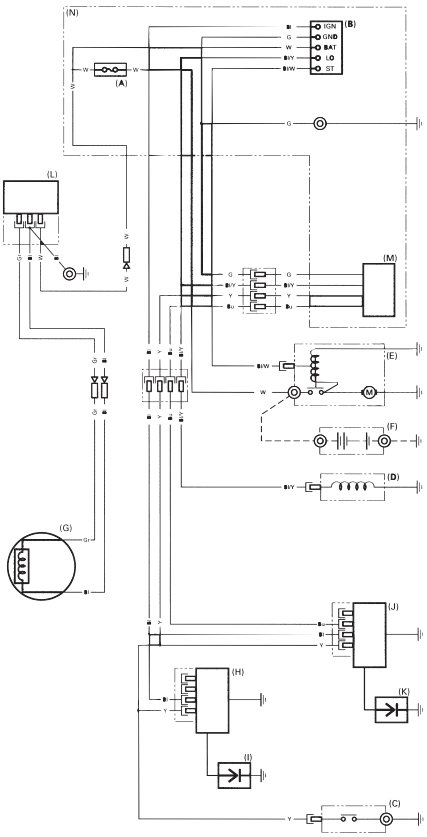

	IGN	GND	BAT	LO	ST
OFF					
ON					
START					

17 A Charge Coil and With Control Box Type

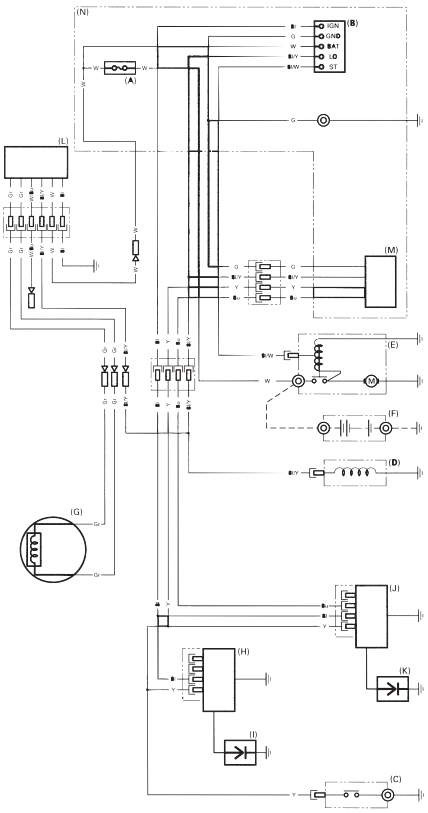

	IGN	GND	BAT	LO	ST
OFF					
ON					
START					

(A)	MAIN FUSE
(B)	ENGINE SWITCH
(C)	OIL LEVEL SWITCH
(D)	FUEL CUT SOLENOID
(E)	STARTER MOTOR
(F)	BATTERY
(G)	CHARGE COIL
(H)	LEFT IGNITION COIL
(I)	LEFT SPARK PLUG
(J)	RIGHT IGNITION COIL
(K)	RIGHT SPARK PLUG
(L)	REGULATOR RECTIFIER
(M)	HOUR METER
(N)	CONTROL BOX

Bl	Black
Br	Brown
Bu	Blue
G	Green
Gr	Gray
Lb	Light blue
Lg	Light green
O	Orange
P	Pink
R	Red
W	White
Y	Yellow

17 A Charge Coil and Without Control Box Type

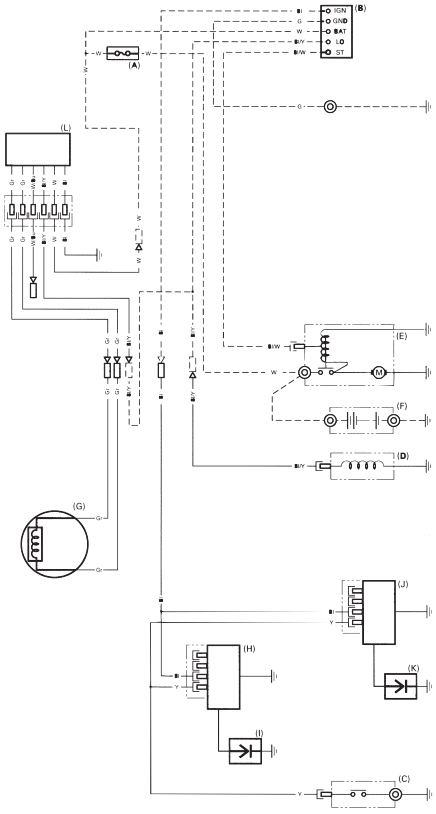

	IGN	GND	BAT	LO	ST
OFF					
ON					
START					

26 A Charge Coil and Without Control Box Type

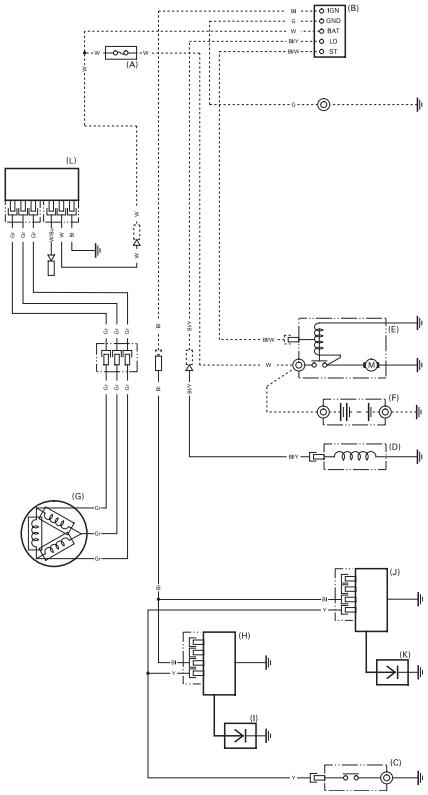

	IGN	GND	BAT	LO	ST
OFF					
ON					
START					

CONSUMER INFORMATION

WARRANTY AND DISTRIBUTOR/DEALER LOCATOR INFORMATION

United States, Puerto Rico, and U.S. Virgin Islands:
Visit our website: www.honda-engines.com

Canada:
Call (888) 9HONDA9
or visit our website: www.honda.ca

For European Area:
Visit our website: http://www.honda-engines-eu.com

CUSTOMER SERVICE INFORMATION

Servicing dealership personnel are trained professionals. They should be able to answer any question you may have. If you encounter a problem that your dealer does not solve to your satisfaction, please discuss it with the dealership's management. The Service Manager, General Manager, or Owner can help.
Almost all problems are solved in this way.

United States, Puerto Rico, and U.S. Virgin Islands:

If you are dissatisfied with the decision made by the dealership's management, contact the Honda Regional Engine Distributor for your area.

If you are still dissatisfied after speaking with the Regional Engine Distributor, you may contact the Honda Office as shown.

All Other Areas:
If you are dissatisfied with the decision made by the dealership's management, contact the Honda Office as shown.

《**Honda's Office**》
When you write or call, please provide this information:

- Equipment manufacturer's name and model number that the engine is mounted on
- Engine model, serial number, and type (see page 14)
- Name of dealer who sold the engine to you
- Name, address, and contact person of the dealer who services your engine
- Date of purchase
- Your name, address and telephone number
- A detailed description of the problem

United States, Puerto Rico, and U.S. Virgin Islands:
American Honda Motor Co., Inc.
Power Equipment Division
Customer Relations Office
4900 Marconi Drive
Alpharetta, GA 30005-8847

Or telephone:
(770) 497-6400
(888) 888-3139 Toll free
M-F 9:00am - 7:30pm ET

Canada:
Honda Canada, Inc.
Please visit www.honda.ca
for address information

Telephone:	(888) 9HONDA9	Toll free
	(888) 946-6329	
Facsimile:	(877) 939-0909	Toll free

For European Area:
Honda Motor Europe Logistics NV.
European Engine Center

http://www.honda-engines-eu.com

All Other Areas:
Please contact the Honda distributor in your area for assistance.

HONDA

Operator acknowledgement

Before operating the RSR, the operator should be able to identify the engine stop, travel/steering controls, lift and tilt controls, auxiliary hydraulic control, attachment locking system, parking function and safe shutdown procedure.

Operator name: _____

Machine serial: _____

Date: _____ Signature: _____

RYNOQUIP RSR - Wheeled Mini Skid Steer